SMC Corporation
Akihabara UDX 15F,
4-14-1, Sotokanda, Chiyoda-ku,
Tokyo 101-0021, JAPAN
URL http://www.smcworld.com
©2010 SMC Corporation All Rights Reserved

09-EU562-UK
D-DN Printing OT 12450KS

SMC Information

Compact / Lightweight 2 Port Solenoid Valve **For Air/Water**

Series VDW30/40-XF

● Compact / Lightweight resin body (PPS) CE RoHS IP65

Weight: 120 g
(VDW30-XF)

● Power consumption

3 W (Standard)

0.5 W (With power-saving circuit)

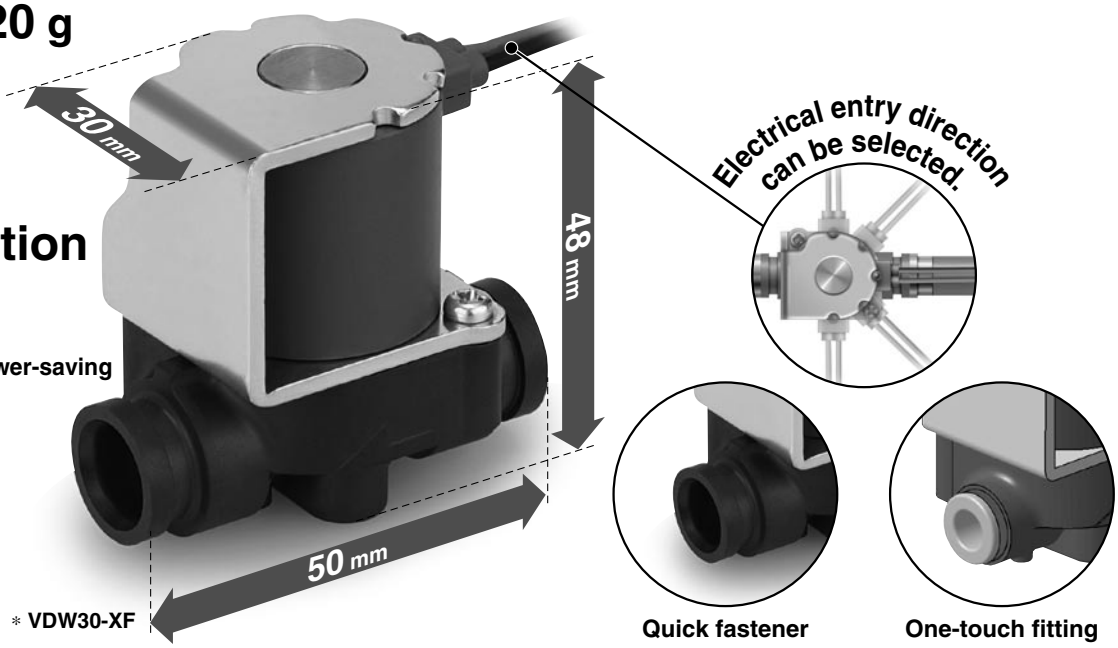

∗ VDW30-XF

Piping labour reduced No torque control needed, easy handling.

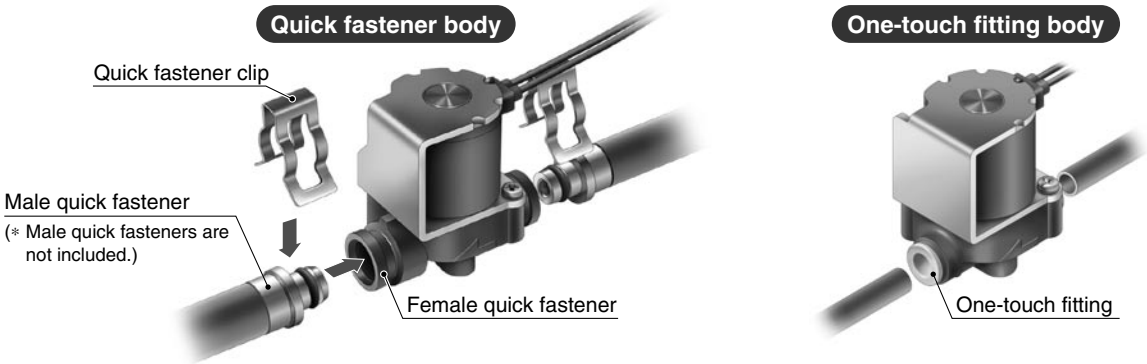

Application Examples

Fuel cell cogeneration system Note)

Dispenser

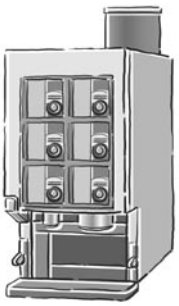

Automatic faucet

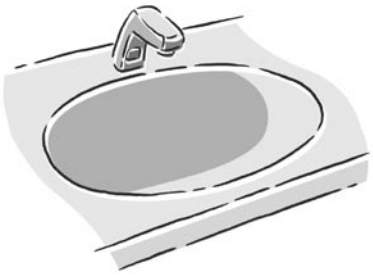

Note) A portion of the design and development work for this product was conducted as part of the Peripheral Equipment Technology Development for Household Fuel Cell Systems project sponsored by the New Energy and Industrial Technology Development Organization (NEDO). In principle, supply of the product for household fuel cell system applications with a capacity of 3 kW or less commences in April 2010.

Compact / Lightweight 2 Port Solenoid Valve

For Air/Water

Series VDW30/40-XF

CE RoHS

How to Order Valves (Single Unit)

VDW 3 1 – 5 G □ □ – 1 – P7 – □ – □ – XF

Series

3	30
4	40

Valve type

1	N.C.

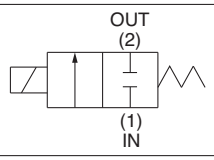

Voltage

5	24 VDC
6	12 VDC

Coil type

G	Grommet

Power-saving circuit

–	None
E	With power-saving circuit

Electrical entry direction

–	Piping direction 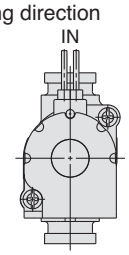	L1	45° left direction 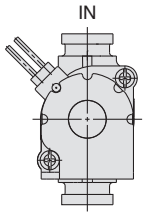
R2	90° right direction 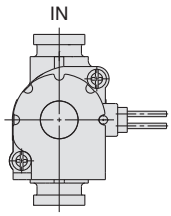	L2	90° left direction 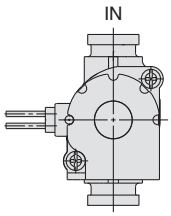

Note) Cannot be reassembled in different combinations.

Orifice diameter

Symbol	Orifice diameter (mm ø)	Series
1	1.0	30
3	3.0	
4	4.5	40
6	6.0	

Port connection type

Symbol	Size	Series
P7	P7 quick fastener	30
P10	P10 quick fastener	40
C4	One-touch fitting for ø4	30
C6	One-touch fitting for ø6	
C8	One-touch fitting for ø8	40
C10	One-touch fitting for ø10	

Body material and coil insulation type

Symbol	Body material	Seal material	Coil insulation
–	PPS	NBR	Class B
A		FKM	
B		EPDM	

Option

–	None
N	Bottom mounting insert type
K	With 2 quick fastener clips Note)

Note) Port connection type: Supports P7 and P10 quick fasteners only.

Quick Fastener Clip Part No.

Series	Size	Quick fastener clip part no. (2 pcs.)	Material
30	P7 quick fastener	VDW30-CP7	Stainless steel
40	P10 quick fastener	VDW40-CP10	

∗ Ten pieces come in each set.

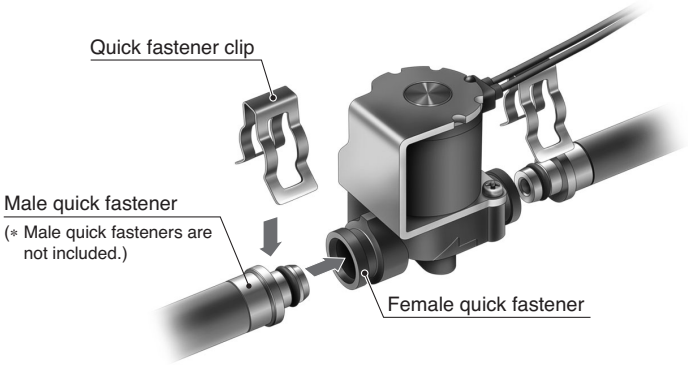

Standard Specifications

Valve specifications	Valve construction		Direct operated poppet
	Valve type		Normally closed (N.C.)
	Fluid	Quick fastener type	Water (1 to 50°C), Air, Inert gas, Heated water (80°C) Note 3), Low vacuum (133 Pa·abs)
		One-touch fitting type Note 4)	Air, Inert gas, Water (1 to 40°C) Note 5), Low vacuum (133 Pa·abs)
	Withstand pressure		1.0 MPa
	Ambient temperature		–10 to 50°C
	Fluid temperature		1 to 50°C (No freezing)
	Ambient humidity		RH85%
	Environment		Location without corrosive or explosive gases
	Valve leakage Note 1)		0.1 cm^3/min or less (With water pressure), 1 cm^3/min or less (Air)
	Exterior leakage		0.1 cm^3/min or less (With water pressure), 1 cm^3/min or less (Air)
	Mounting orientation		Upward coil
	Vibration/Impact Note 2)		30 m/s^2 / 90 m/s^2
	Port size		P7, P10 (Quick fastener) C4, C6, C8, C10 (One-touch fitting)
	Orifice diameter		ø1, ø3, ø4.5, ø6
Coil specifications	Rated voltage		24 VDC, 12 VDC
	Allowable voltage fluctuation		±10% of rated voltage
	Coil insulation type		Class B
	Insulation resistance		500 VDC, 10 MΩ or more
	Voltage limit		1800 VAC, 1 sec., 3 mA or less
	Noise tolerance Note 3)		Simulation noise: 500 Vp-p (Based on 1 μ sec. pulse width, 50 ±10 Hz frequency noise simulation)
			Fast transient noise: IEC61000-4-4: 1 kV
	Power consumption		VDW30: 3 W (With 0.5 W power-saving circuit) VDW40: 6.5 W (With 1 W power-saving circuit)
	Enclosure		IP65

Note 1) The amount of leakage from the OUT port when the set pressure is applied to the IN port.
Note 2) Vibration resistance ····· No malfunction when tested with one sweep of 10 to 150 Hz in the axial direction and at a right angle to the armature, in both energized and deenergized states.
Impact resistance ····· No malfunction when tested with a drop tester in the axial direction and at a right angle to the main armature, one time each in energized and deenergized states.
Note 3) Products with power-saving circuit only.
Note 4) When using One-touch fittings, make sure to employ tubing that is compatible with SMC fittings (Series KQ2).
Note 5) When using One-touch fittings with water, care must be taken when handling tubing and piping conditions to prevent water from leaking when the tubes are inserted. Soft nylon tubing cannot be used with water.

Characteristic Specifications

Model	Port connection type	Orifice dia. (mm ø)	Max. operating pressure differential (MPa) Note 1)	Operating Pressure range (MPa) Note 2) Note 3)	Weight (kg)
			Pressure port 1		
VDW30	P7 C4, C6	1.0	0.6	–0.1 to 0.6	0.1
		3.0	0.1		
VDW40	P10 C8, C10	4.5	0.1 (With power-saving circuit)		0.23
			0.05 (Without power-saving circuit)		
		6.0	0.05 (With power-saving circuit)		
			0.02 (Without power-saving circuit)		

Note 1) The maximum operating pressure differential changes depending on the flow direction of the fluid. Refer to page 7 for details.
Note 2) For low vacuum specifications, the operating pressure range is 1 Torr (1.33 x 10^2 Pa) to 0.6 MPa. Please consult with SMC if using below 1 Torr (1.33 x 10^2 Pa).
Some leakage is permitted, so avoid use in situations where a vacuum must be maintained, such as in leak testing.
Note 3) The surge pressure must be under the maximum operating pressure.

Flow Characteristics

Model	Port connection type	Orifice dia. (mm ø)	Water		Air		
			1→2 (IN→N.C.)		1→2 (IN→N.C.)		
		N.C.	Av x 10^{-6} m^2	Cv converted	C [dm^3/(s·bar)]	b	Cv
VDW30	P7, C4, C6	1.0	0.96	0.04	0.14	0.4	0.09
		3.0	6.7	0.28	1.0	0.52	0.3
VDW40	P10, C8, C10	4.5	15	0.61	2.3	0.46	0.61
		6.0	24	1.1	4.0	0.4	1.1

Construction

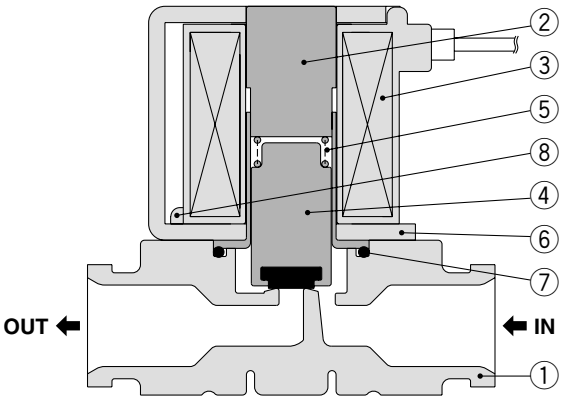

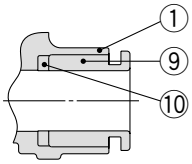

One-touch fitting

Component Parts Materials

No.	Description	Material
1	**Body**	PPS
2	**Tube assembly**	Stainless steel
3	**Coil assembly**	—
4	**Armature assembly**	Stainless steel, NBR, FKM, EPDM
5	**Return spring**	Stainless steel
6	**Flame**	Iron
7	**O-ring**	NBR, FKM, EPDM
8	**Round head combination screw**	Iron
9	**Cassette**	POM, Stainless steel
10	**Seal**	NBR, FKM, EPDM

⚠ Caution

Do not disassemble.

Dimensions

VDW30-□G□□-□-P7 / P7 Quick Fastener

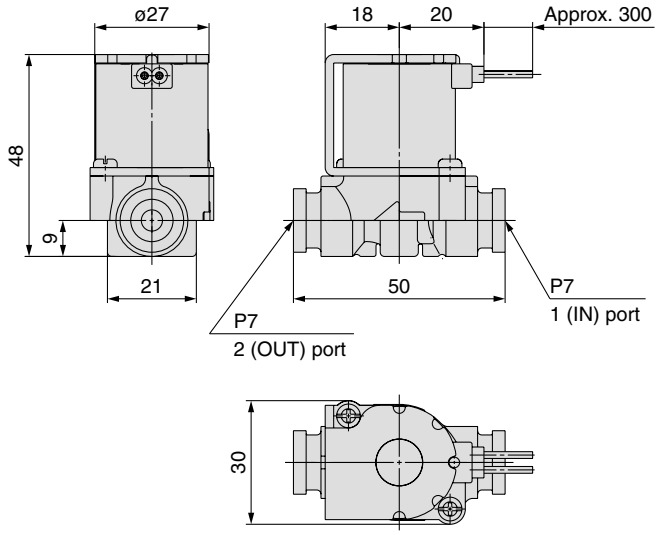

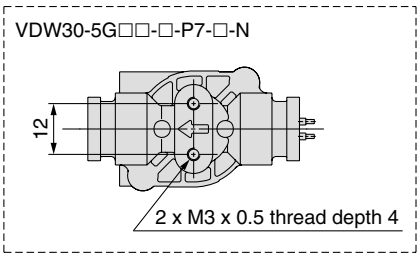

VDW40-□G□□-□-P10 / P10 Quick Fastener

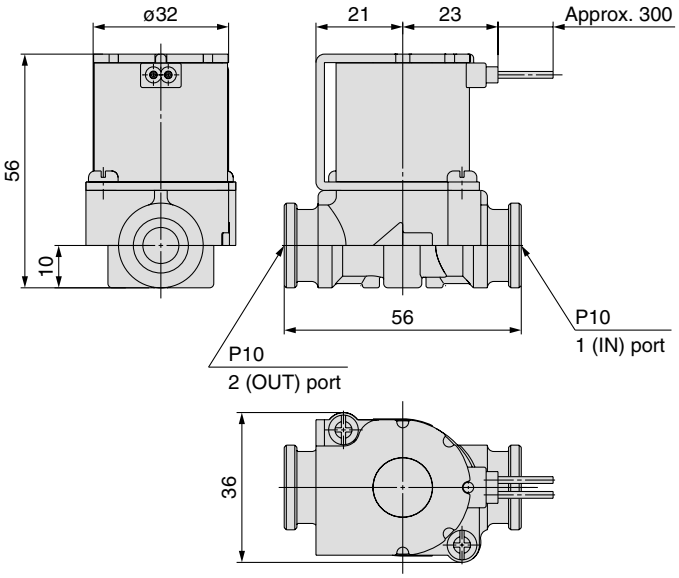

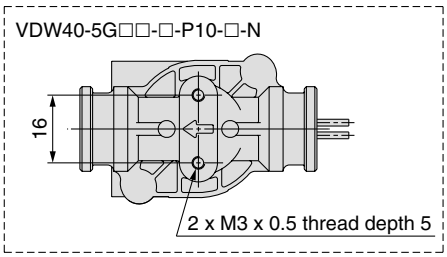

Male Quick Fastener Dimensions

∗ Male quick fasteners are not included.

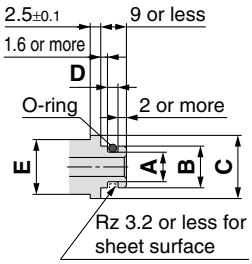

Male Quick Fastener Dimensions Table

Port size (Quick fastener)	P7	P10
A	$ø7^{0}_{-0.05}$	$ø10^{0}_{-0.05}$
B	ø9.9±0.05	ø12.85±0.05
C	ø15	ø20
D	$2.5^{+0.25}_{0}$	$2.5^{+0.25}_{0}$
E	ø13	ø17
O-ring dimentions∗ (Nominal no.)	P7	P10
Applicable clip	Clip for P7	Clip for P10

∗ Conforms to JIS B 2401 dimensional standard for O-rings for industrial applications.

Quick Fastener Clip Dimensions

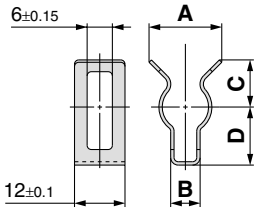

Applicable Clip Part No./Dimentions

Port size (Quick fastener)	P7	P10
Clip part no.	VDW30-CP7	VDW40-CP10
A	26	28
B	7	10
C	9	10
D	14	15

Dimensions

VDW30-□G□□-□-$^{C4}_{C6}$/One-touch fitting for ø4, ø6

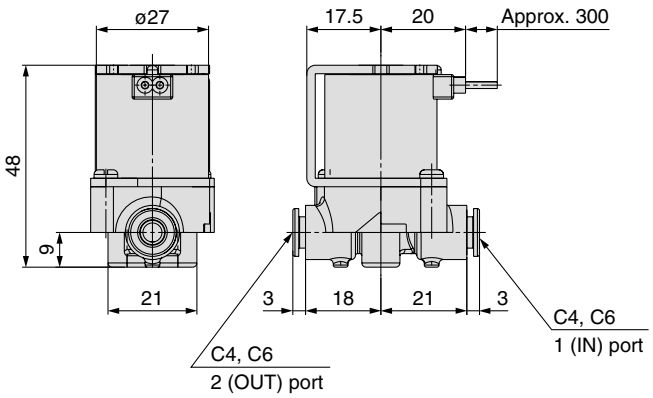

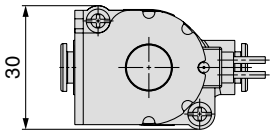

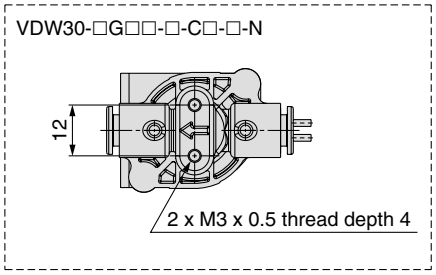

VDW40-□G□□-□-$^{C8}_{C10}$/One-touch fitting for ø8, ø10

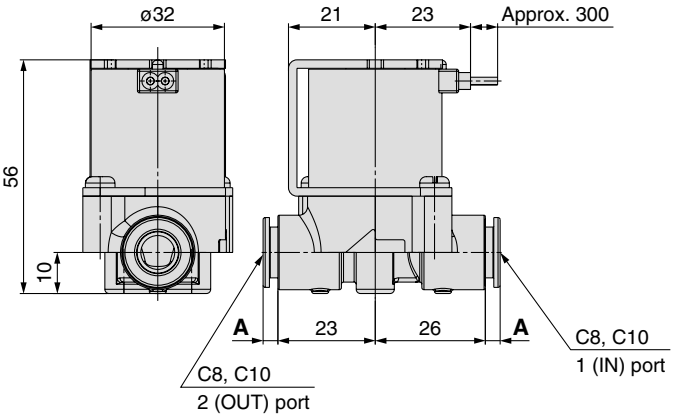

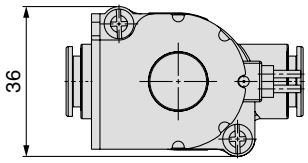

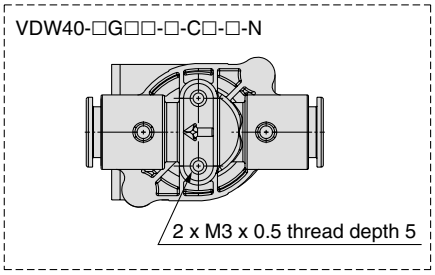

Dimentions

Series		A
VDW40	C8	3
	C10	4

For information on handling One-touch fittings and appropriate tubing, see Series KQ2 One-touch fittings in Best Pneumatics No. 6. It can be downloaded from the SMC Web site: http://www.smcworld.com/

Series VDW30/40
Specific Product Precautions 1

Be sure to read before handling. Refer to back cover for Safety Instructions, "Handling Precautions for SMC Products" (M-E03-3) for Fluids Control 2 Port Valves Precautions, and Series VDW in Best Pneumatics No. 7 for Specific Product Precautions.

Selection

⚠ Warning

1. Fluid quality

In the case of water

The use of a fluid which contains foreign matter can cause problems such as malfunction and seal failure by promoting wear of the valve seat and armature, and by sticking to the sliding parts of the armature, etc. Install a suitable filter (strainer) immediately upstream from the valve. In general, a mesh of about 50 to 100 is a guideline for the filter.

When using ordinary tap water, scaling and sludge from substances in hard water such as calcium and magnesium can cause solenoid valves to malfunction. It is therefore necessary to install a water softener to remove such substances and a filter (strainer) immediately before the solenoid valve.

In the case of air

Please use ordinary compressed air where a filter of 40 μm or less is provided on the inlet side piping. (Except dry air)

⚠ Caution

1. Leakage voltage

Particularly when using a resistor in parallel with a switching element and using a C-R element (surge voltage suppressor) to protect the switching element, take note that leakage current will flow through the resistor, C-R element, etc., creating a possible danger that the valve may not turn off.

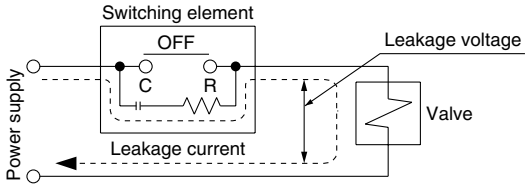

1) Take steps to ensure that there are no problems such as abnormal voltage drops or insufficient capacity associated with the signal power supply used to drive the solenoid valve.
2) Make sure the leakage current flowing through the solenoid valve when power is not being supplied is 0.1 mA or less. If there the leakage current is larger than this, take appropriate measures such as connecting a bleeder resister (models with power-saving circuit).
3) An attenuation function is provided to reduce voltage surges produced by the solenoid valve. However, the controller should be equipped with protection against voltage surges as some residual surge voltage may still reach external components.

DC coil

2% or less of rated voltage

2. Low temperature operation

1) The valves can be used up to an ambient temperature of –10°C, however take measures to prevent solidification of impurities or freezing, etc.
2) When using valves for water application in cold climates, first stop the water supply/discharge of the pump, etc., and then take measures to prevent freezing such as draining water in pipe. When heating by steam, be careful not to expose the coil portion to steam. Also, please take measures to prevent freezing such as heating the body.

Mounting

⚠ Warning

1. When the valve is secured using an insert nut (part number suffix "-N"), handle with care during installation because the application of excessive stress to the body could damage it (appropriate tightening torque: 0.8 to 1.0 N·m).

Piping

⚠ Warning

1. During use, deterioration of the tubing or damage to the fittings could cause tubes to come loose from their fittings and thrash about.

To prevent uncontrolled tube movement, install protective covers or fasten tubes securely in place.

⚠ Caution

2. Connection of piping to products

- When connecting piping to a product, refer to its instruction manual to avoid mistakes regarding the supply port, etc.
- Do not apply external force to the coil when holding it to connect piping, as the tube may deform.
- When attaching fittings to a solenoid valve, do not use fittings that do not conform to the quick fastener standard.
- Handle with care when attaching fittings because the application of excessive stress to the quick fastener portion could damage the body.

Recommended Piping Conditions

1. When connecting tubes using One-touch fittings, provide some spare tube length as shown in Fig. 1, recommended piping configuration.

Also, do not apply external force to the fittings when binding tubes with bands, etc. (see Fig. 2.)

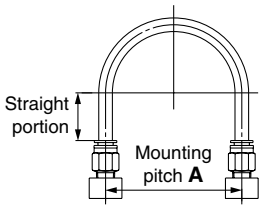

Fig. 1 Recommended piping configuration

Unit: mm

Tube size	Mounting pitch **A**			Straight portion length
	Nylon tube	Soft nylon tube	Polyurethane tube	
ø4	56 or more	30 or more	26 or more	20 or more
ø6	84 or more	39 or more	39 or more	30 or more
ø8	112 or more	58 or more	52 or more	40 or more
ø10	140 or more	70 or more	69 or more	50 or more

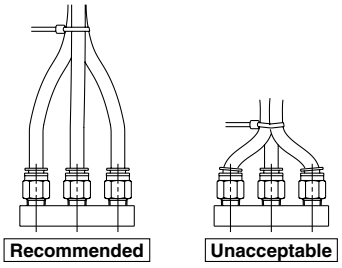

Fig. 2 Binding tubes with bands

Specific Product Precautions 2

Be sure to read before handling. Refer to back cover for Safety Instructions, "Handling Precautions for SMC Products" (M-E03-3) for Fluids Control 2 Port Valves Precautions, and Series VDW in Best Pneumatics No. 7 for Specific Product Precautions.

Electrical Connections

⚠ Caution

1. **Solenoid valves with power-saving circuits (coil part number "-5GE") have polarity, so follow the wiring diagram below when making connections. Standard coils have no polarity.**
   The solenoid valve will not switch properly if the polarity is reversed.

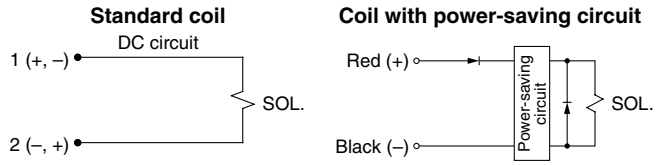

2. **Apply the correct voltage.**
   Incorrect voltage could cause shorting of the power-saving circuit, coil burnout, or valve malfunction.
3. **Do not apply a tension load of 30 N or more to the solenoid valve lead wires.**
4. **Apply voltage which is within ±10% of the rated voltage.**
   Also, do not use excessive power supply voltage or superimpose electrical noise such as ripple voltage on the power supply voltage as these could harm the valve.
5. **When connecting an induction load such as a circuit protector to the solenoid valve connection, take measures to ensure that the current to the solenoid valve is not reduced too much.**

Maintenance

⚠ Warning

1. **Do not disassemble solenoid valves.**
   Disassembling a solenoid valve will void its warranty.
2. **Low frequency operation**
   Switch valves at least once every 30 days to prevent malfunction. Also, in order to use it under the optimum state, conduct a regular inspection once a half year.

⚠ Caution

1. **Store indoors in a location away from direct sunlight and where the following conditions are maintained.**
   - Temperature: –10 to 50°C
   - Relative humidity: 20% to 85%RH (No condensation)
   - Liquid rings may not be used.
2. **Storage**
   When not using for a long time (more than approx. one month) after use with liquid, thoroughly remove all moisture to prevent rust and deterioration of rubber materials, etc.

Fluid Flow Direction

⚠ Caution

The maximum operating pressure differential differs depending on the flow direction of the fluid. If the pressure differential at each port exceeds the values in the table below, valve leakage may occur.

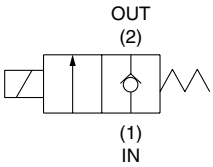

2 Port Valve

Model	Orifice diameter (mm ø)	Max. operating pressure differential (MPa)
		Pressure port 1
VDW30	1.0	0.6
	3.0	0.1
VDW40	4.5	0.1 (With power-saving circuit)
		0.05 (Without power-saving circuit)
	6.0	0.05 (With power-saving circuit)
		0.02 (Without power-saving circuit)

One-touch Fittings

⚠ Caution

For information on handling One-touch fittings and appropriate tubing, see Series KQ2 One-touch fittings in Best Pneumatics No. 6. It can be downloaded from the SMC Web site: http://www.smcworld.com/

⚠ Safety Instructions

These safety instructions are intended to prevent hazardous situations and/or equipment damage. These instructions indicate the level of potential hazard with the labels of **"Caution," "Warning"** or **"Danger."** They are all important notes for safety and must be followed in addition to International Standards (ISO/IEC)*1), and other safety regulations.

⚠ Caution: **Caution** indicates a hazard with a low level of risk which, if not avoided, could result in minor or moderate injury.

⚠ Warning: **Warning** indicates a hazard with a medium level of risk which, if not avoided, could result in death or serious injury.

⚠ Danger : **Danger** indicates a hazard with a high level of risk which, if not avoided, will result in death or serious injury.

*1) ISO 4414: Pneumatic fluid power – General rules relating to systems.
ISO 4413: Hydraulic fluid power – General rules relating to systems.
IEC 60204-1: Safety of machinery – Electrical equipment of machines. (Part 1: General requirements)
ISO 10218-1: Manipulating industrial robots - Safety.
etc.

⚠ Warning

1. **The compatibility of the product is the responsibility of the person who designs the equipment or decides its specifications.**
   Since the product specified here is used under various operating conditions, its compatibility with specific equipment must be decided by the person who designs the equipment or decides its specifications based on necessary analysis and test results. The expected performance and safety assurance of the equipment will be the responsibility of the person who has determined its compatibility with the product. This person should also continuously review all specifications of the product referring to its latest catalogue information, with a view to giving due consideration to any possibility of equipment failure when configuring the equipment.
2. **Only personnel with appropriate training should operate machinery and equipment.**
   The product specified here may become unsafe if handled incorrectly. The assembly, operation and maintenance of machines or equipment including our products must be performed by an operator who is appropriately trained and experienced.
3. **Do not service or attempt to remove product and machinery/equipment until safety is confirmed.**
   1. The inspection and maintenance of machinery/equipment should only be performed after measures to prevent falling or runaway of the driven objects have been confirmed.
   2. When the product is to be removed, confirm that the safety measures as mentioned above are implemented and the power from any appropriate source is cut, and read and understand the specific product precautions of all relevant products carefully.
   3. Before machinery/equipment is restarted, take measures to prevent unexpected operation and malfunction.
4. **Contact SMC beforehand and take special consideration of safety measures if the product is to be used in any of the following conditions.**
   1. Conditions and environments outside of the given specifications, or use outdoors or in a place exposed to direct sunlight.
   2. Installation on equipment in conjunction with atomic energy, railways, air navigation, space, shipping, vehicles, military, medical treatment, combustion and recreation, or equipment in contact with food and beverages, emergency stop circuits, clutch and brake circuits in press applications, safety equipment or other applications unsuitable for the standard specifications described in the product catalogue.
   3. An application which could have negative effects on people, property, or animals requiring special safety analysis.
   4. Use in an interlock circuit, which requires the provision of double interlock for possible failure by using a mechanical protective function, and periodical checks to confirm proper operation.

⚠ Caution

1. **The product is provided for use in manufacturing industries.**
   The product herein described is basically provided for peaceful use in manufacturing industries.
   If considering using the product in other industries, consult SMC beforehand and exchange specifications or a contract if necessary.
   If anything is unclear, contact your nearest sales branch.

Limited warranty and Disclaimer/ Compliance Requirements

The product used is subject to the following "Limited warranty and Disclaimer" and "Compliance Requirements".
Read and accept them before using the product.

Limited warranty and Disclaimer

1. The warranty period of the product is 1 year in service or 1.5 years after the product is delivered.*2)
   Also, the product may have specified durability, running distance or replacement parts. Please consult your nearest sales branch.
2. For any failure or damage reported within the warranty period which is clearly our responsibility, a replacement product or necessary parts will be provided.
   This limited warranty applies only to our product independently, and not to any other damage incurred due to the failure of the product.
3. Prior to using SMC products, please read and understand the warranty terms and disclaimers noted in the specified catalogue for the particular products.

***2) Vacuum pads are excluded from this 1 year warranty.**
A vacuum pad is a consumable part, so it is warranted for a year after it is delivered.
Also, even within the warranty period, the wear of a product due to the use of the vacuum pad or failure due to the deterioration of rubber material are not covered by the limited warranty.

Compliance Requirements

1. The use of SMC products with production equipment for the manufacture of weapons of mass destruction (WMD) or any other weapon is strictly prohibited.
2. The exports of SMC products or technology from one country to another are governed by the relevant security laws and regulations of the countries involved in the transaction. Prior to the shipment of a SMC product to another country, assure that all local rules governing that export are known and followed.

⚠ Safety Instructions Be sure to read "Handling Precautions for SMC Products" (M-E03-3) before using.

SMC Corporation (Europe)

Austria	☎+43 2262622800	www.smc.at	office@smc.at
Belgium	☎+32 (0)33551464	www.smcpneumatics.be	info@smcpneumatics.be
Bulgaria	☎+359 29744492	www.smc.bg	office@smc.bg
Croatia	☎+385 13776674	www.smc.hr	office@smc.hr
Czech Republic	☎+420 541424611	www.smc.cz	office@smc.cz
Denmark	☎+45 70252900	www.smcdk.com	smc@smcdk.com
Estonia	☎+372 6510370	www.smcpneumatics.ee	smc@smcpneumatics.ee
Finland	☎+358 207513513	www.smc.fi	smcfi@smc.fi
France	☎+33 (0)164761000	www.smc-france.fr	contact@smc-france.fr
Germany	☎+49 (0)61034020	www.smc-pneumatik.de	info@smc-pneumatik.de
Greece	☎+30 210 2717265	www.smchellas.gr	sales@smchellas.gr
Hungary	☎+36 23511390	www.smc.hu	office@smc.hu
Ireland	☎+353 (0)14039000	www.smcpneumatics.ie	sales@smcpneumatics.ie
Italy	☎+39 (0)292711	www.smcitalia.it	mailbox@smcitalia.it
Latvia	☎+371 67817700	www.smclv.lv	info@smclv.lv
Lithuania	☎+370 5 2308118	www.smclt.lt	info@smclt.lt
Netherlands	☎+31 (0)205318888	www.smcpneumatics.nl	info@smcpneumatics.nl
Norway	☎+47 67129020	www.smc-norge.no	post@smc-norge.no
Poland	☎+48 222119600	www.smc.pl	office@smc.pl
Portugal	☎+351 226166570	www.smc.eu	postpt@smc.smces.es
Romania	☎+40 213205111	www.smcromania.ro	smcromania@smcromania.ro
Russia	☎+7 8127185445	www.smc-pneumatik.ru	info@smc-pneumatik.ru
Slovakia	☎+421 413213212	www.smc.sk	office@smc.sk
Slovenia	☎+386 73885412	www.smc.si	office@smc.si
Spain	☎+34 945184100	www.smc.eu	post@smc.smces.es
Sweden	☎+46 (0)86031200	www.smc.nu	post@smcpneumatics.se
Switzerland	☎+41 (0)523963131	www.smc.ch	info@smc.ch
Turkey	☎+90 (0)2124440762	www.entek.com.tr	smc@entek.com.tr
UK	☎+44 (0)845 121 5122	www.smcpneumatics.co.uk	sales@smcpneumatics.co.uk

SMC CORPORATION Akihabara UDX 15F, 4-14-1, Sotokanda, Chiyoda-ku, Tokyo 101-0021, JAPAN Phone: 03-5207-8249 FAX: 03-5298-5362

1st printing OY printing OY 00 Printed in Spain

Specifications are subject to change without prior notice and any obligation on the part of the manufacturer.